9. Engine Assembly

A: REMOVAL

1) Set the vehicle on a lift.
2) Open the front hood fully and support with the front food stay.
3) Collect the refrigerant from the A/C system. <Ref. to AC-19, PROCEDURE, Refrigerant Recovery Procedure.>
4) Release the fuel pressure.
<Ref. to FU(H4SO)-43, RELEASING OF FUEL PRESSURE, PROCEDURE, Fuel.>
5) Disconnect the ground cable from the battery.

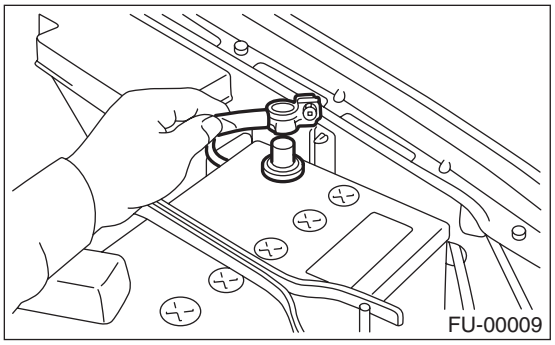

6) Open the fuel filler flap lid, and remove the fuel filler cap.
7) Remove the air intake duct, air cleaner case and air intake chamber.
<Ref. to IN(H4SO)-7, REMOVAL, Air Intake Duct.> <Ref. to IN(H4SO)-5, REMOVAL, Air Cleaner Case.> <Ref. to IN(H4SO)-6, REMOVAL, Air Intake Chamber.>
8) Remove the under cover.
9) Remove the radiator from the vehicle. <Ref. to CO(H4SO)-23, REMOVAL, Radiator.>
10) Disconnect the A/C pressure hoses from A/C compressor.
11) Remove the air intake chamber stay.

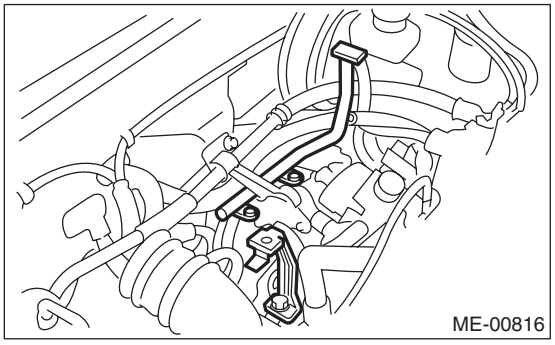

12) Disconnect the following connectors and cables.
(1) Front oxygen (A/F) sensor connector
(2) Rear oxygen sensor connector

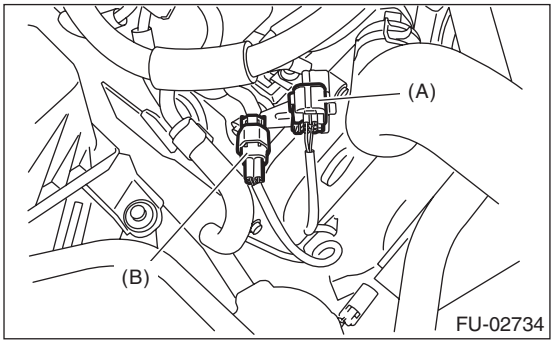

(A) Front oxygen (A/F) sensor connector
(B) Rear oxygen sensor connector

(3) Engine ground cable

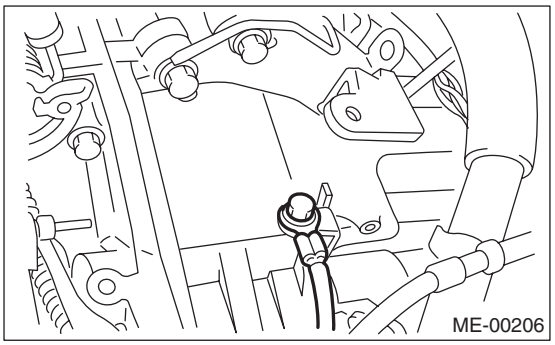

(4) Engine harness connectors

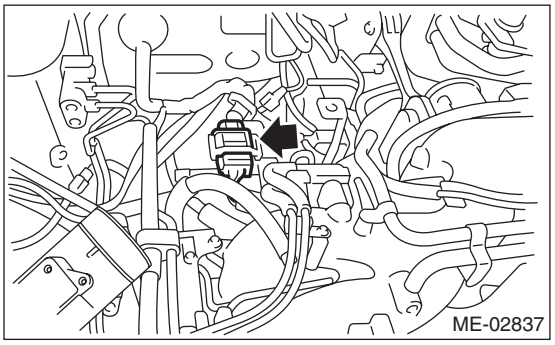

(5) Generator connector and terminal

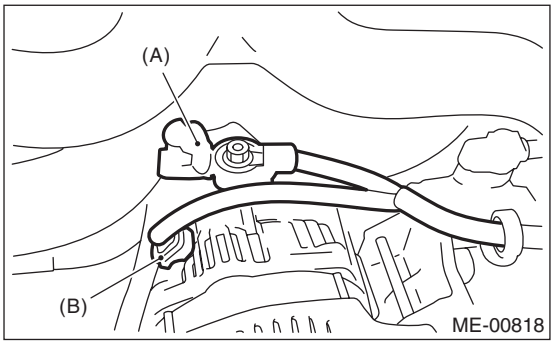

(A) Terminal
(B) Generator connector

(6) A/C compressor connector

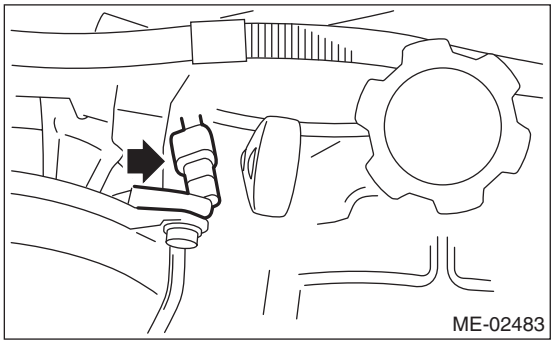

(7) Power steering switch connector

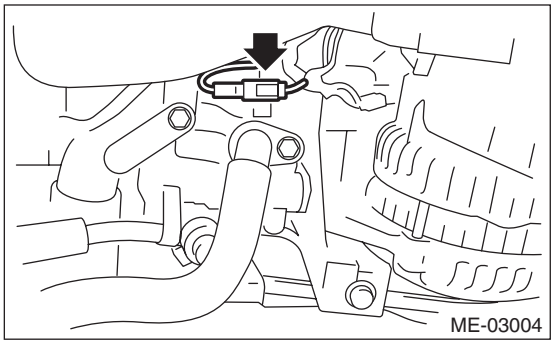

13) Disconnect the following hoses.

(1) Brake booster vacuum hose

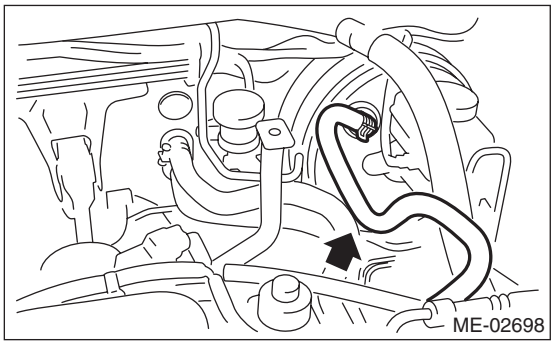

(2) Heater inlet and outlet hoses

14) Remove the power steering pump from the bracket.

(1) Loosen the lock bolt and slider bolt, and remove the front side V-belt. <Ref. to ME(H4SO)-39, FRONT SIDE BELT, REMOVAL, V-belt.>

(2) Remove the pipe along with the bracket.

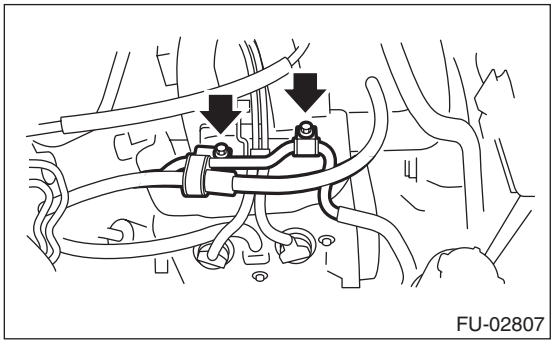

(3) Remove the bolts which secure the power steering pump to the bracket.

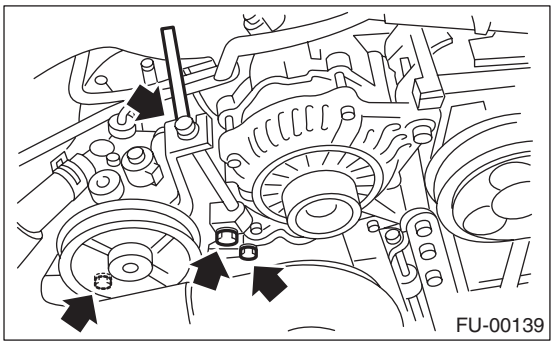

(4) Pull the power steering reserve tank up and remove from the bracket.

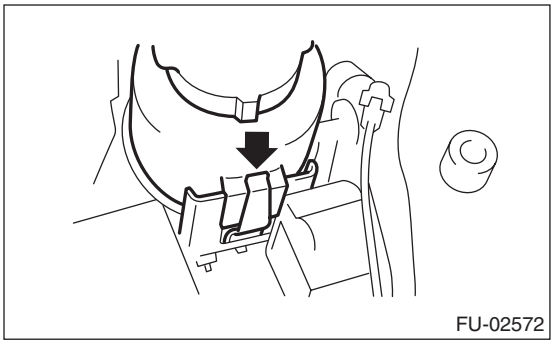

(5) Set the power steering pump towards the right side wheel apron in order to avoid falling.

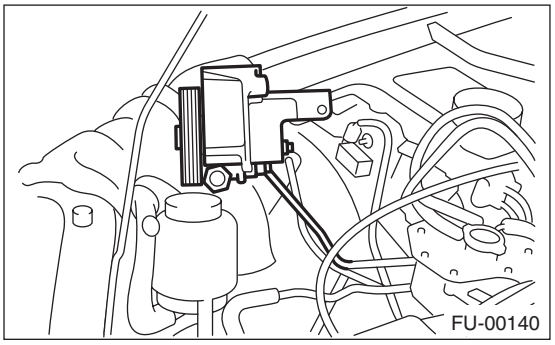

15) Remove the front and center exhaust pipes. <Ref. to EX(H4SO)-4, REMOVAL, Front Exhaust Pipe.>

16) Remove the bolts and nuts which hold lower side of transmission to engine.

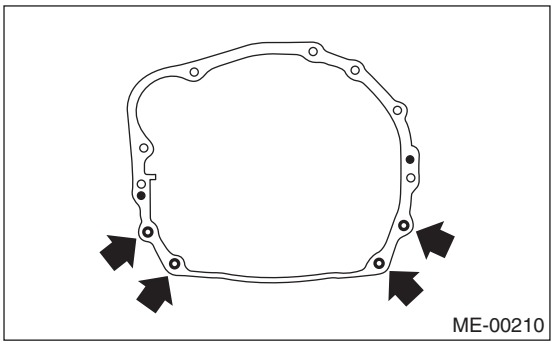

17) Remove the nuts which install front cushion rubber onto front crossmember.

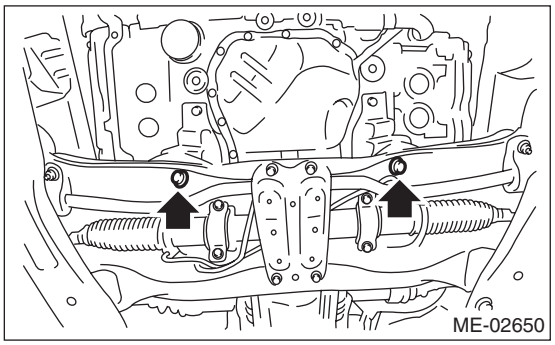

18) Separate the torque converter clutch from drive plate. (AT model)
(1) Lower the vehicle.
(2) Remove the service hole plug.
(3) Remove the bolts which hold torque converter clutch to drive plate.
(4) Remove all bolts while turning the crankshaft with a socket wrench.

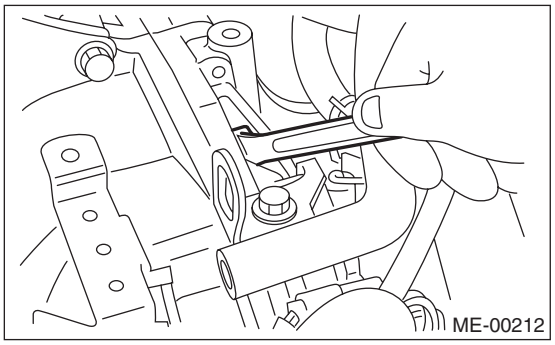

19) Remove the pitching stopper.

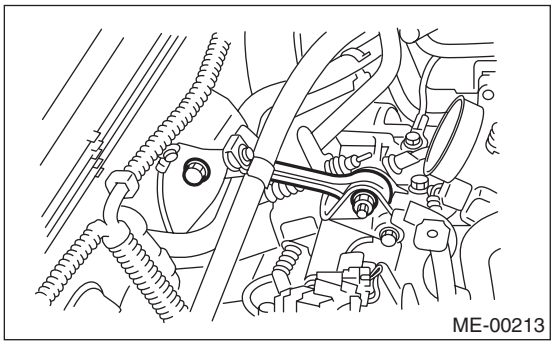

20) Disconnect the fuel hoses from fuel pipe.
(1) Disconnect the quick connector on the fuel delivery line by pushing the ST in the direction of the arrow.
ST 42099AE000 CONNECTOR REMOVER
(2) Remove the clip and disconnect the evaporation hose from the pipe.

CAUTION:
- **Be careful not to spill fuel.**
- **Catch the fuel from hoses using a container or cloth.**

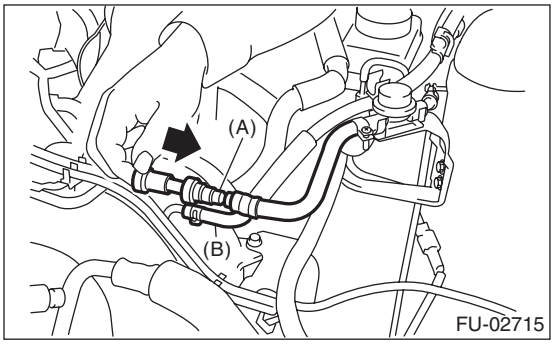

(A) Fuel delivery hose
(B) Evaporation hose

21) Support the engine with a lifting device and wire ropes.

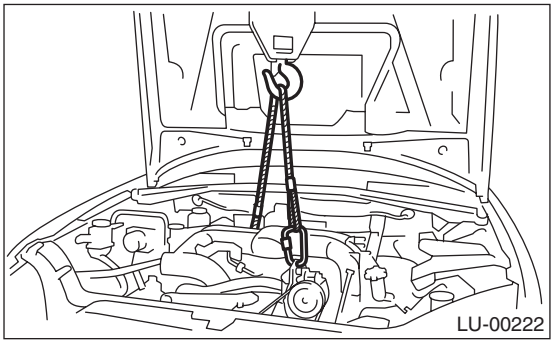

22) Support the transmission with a garage jack.

CAUTION:
Doing this is very important to prevent the transmission from lowering due to its own weight.

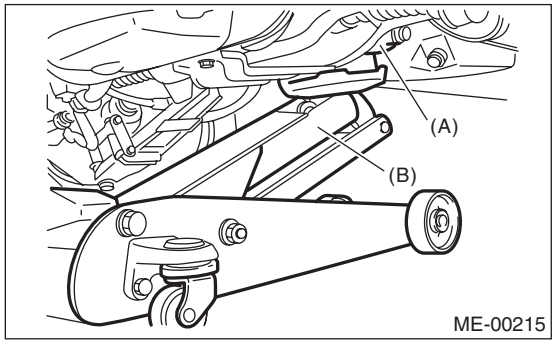

(A) Transmission
(B) Garage jack

CAUTION:
Before removing the engine away from transmission, check to be sure no work has been overlooked.

23) Separation of engine and transmission.
(1) Remove the starter. <Ref. to SC(H4SO)-8, REMOVAL, Starter.>
(2) Remove the bolts which hold upper side of transmission to engine.

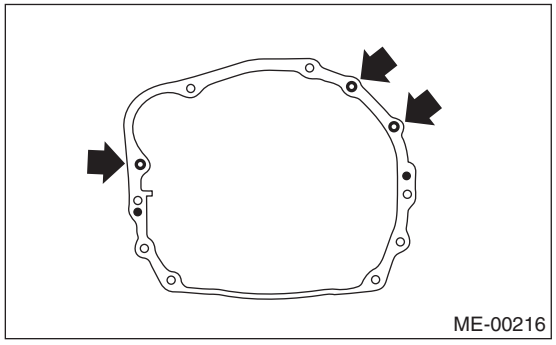

24) Attach the ST to the converter case. (AT model)
ST 498277200 STOPPER SET

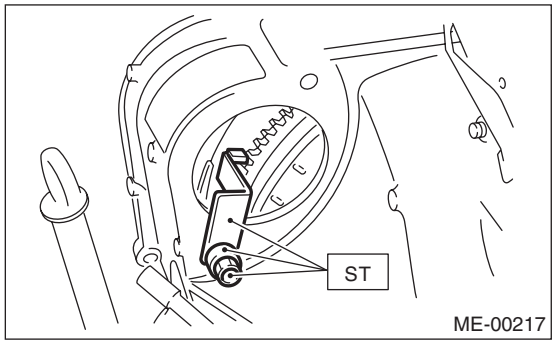

25) Remove the engine from vehicle.
(1) Slightly raise the engine.
(2) Raise the transmission with garage jack.
(3) Move the engine horizontally until main shaft is withdrawn from clutch cover.
(4) Slowly move the engine away from engine compartment.

NOTE:
Be careful not to damage adjacent parts or body panels with crank pulley, oil level gauge, etc.

26) Remove the front cushion rubbers.

B: INSTALLATION

1) Install the front cushion rubbers.

Tightening torque:
35 N·m (3.6 kgf-m, 25.8 ft-lb)

2) Position the engine in engine compartment and align it with transmission.

NOTE:
Be careful not to damage adjacent parts or body panels with crank pulley, oil level gauge, etc.

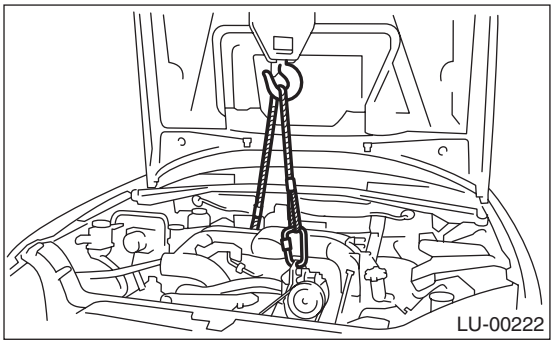

3) Apply a small amount of grease to the splines of the main shaft. (MT model)

4) Tighten the bolts which hold upper side of transmission to engine.

Tightening torque:
50 N·m (5.1 kgf-m, 36.9 ft-lb)

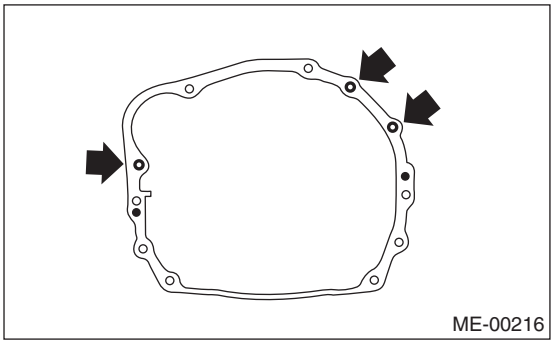

5) Remove the lifting device and wire ropes.
6) Remove the garage jack.
7) Install the pitching stopper.

Tightening torque:
T1: 50 N·m (5.1 kgf-m, 36.9 ft-lb)
T2: 58 N·m (5.9 kgf-m, 42.8 ft-lb)

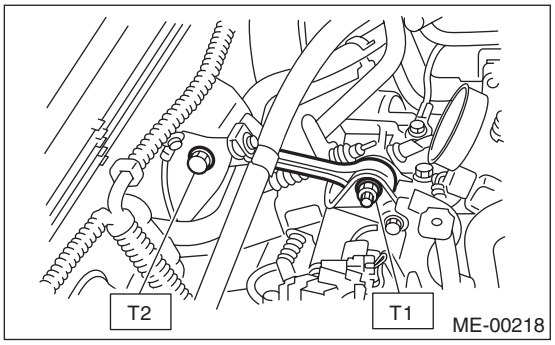

8) Remove the ST from converter case. (AT model)

NOTE:
Be careful not to drop the ST into the converter case when removing the ST.
ST 498277200 STOPPER SET

9) Install the starter. <Ref. to SC(H4SO)-8, INSTALLATION, Starter.>

10) Install the torque converter clutch to drive plate. (AT model)
(1) Tighten the bolts which hold torque converter clutch to drive plate.
(2) Tighten all bolts while rotating the engine in the rotation direction a little at a time using socket wrench.

NOTE:
Be careful not to drop bolts into the torque converter clutch housing.

Tightening torque:
25 N·m (2.5 kgf-m, 18.4 ft-lb)

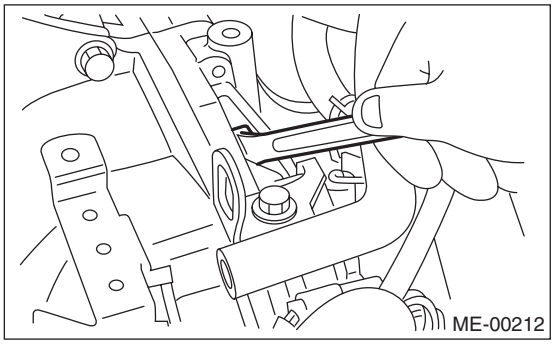

(3) Attach the service hole plug to prevent entry of foreign objects.

11) Attach the power steering pump to the bracket.
(1) Attach the power steering tank to the bracket.

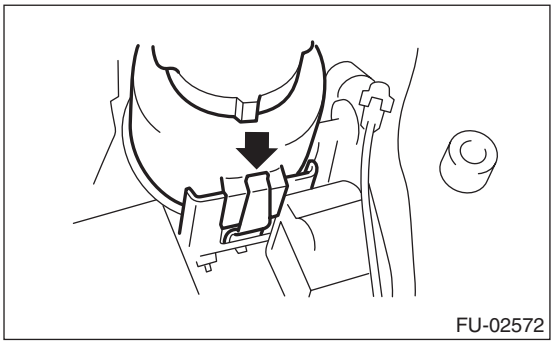

(2) Install the power steering pump to the bracket, and tighten the bolts.

Tightening torque:
22 N·m (2.2 kgf-m, 16 ft-lb)

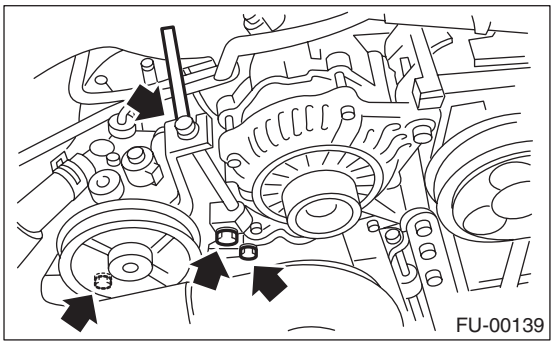

(3) Install the pipe together with the bracket.

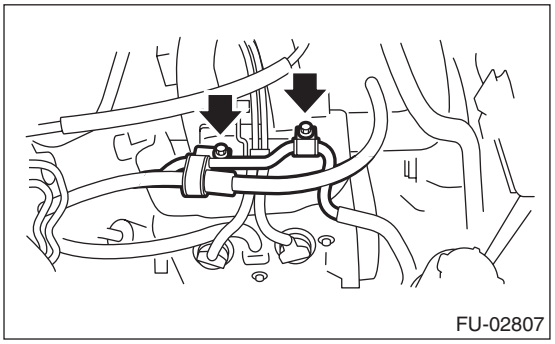

(4) Connect the power steering switch connector.

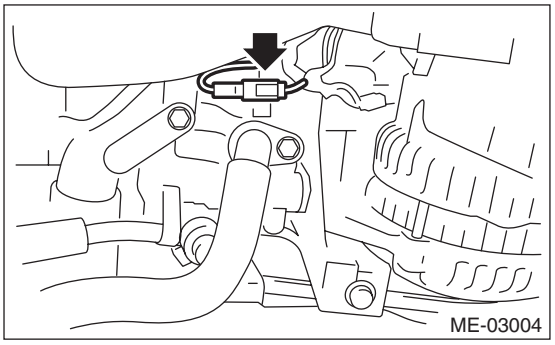

(5) Install and adjust the front side belt. <Ref. to ME(H4SO)-39, FRONT SIDE BELT, INSTALLATION, V-belt.>

12) Lift up the vehicle.

13) Tighten the bolts and nuts which hold lower side of the transmission to engine.

Tightening torque:
50 N·m (5.1 kgf-m, 36.9 ft-lb)

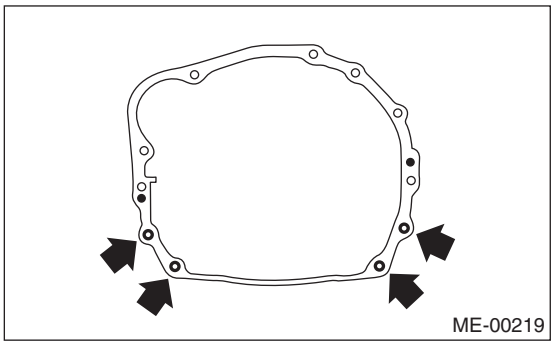

14) Tighten the nuts which install the front cushion rubber onto crossmember.

Tightening torque:
85 N·m (8.7 kgf-m, 63 ft-lb)

NOTE:
Make sure the front cushion rubber mounting bolts (A) and locator (B) are securely installed.

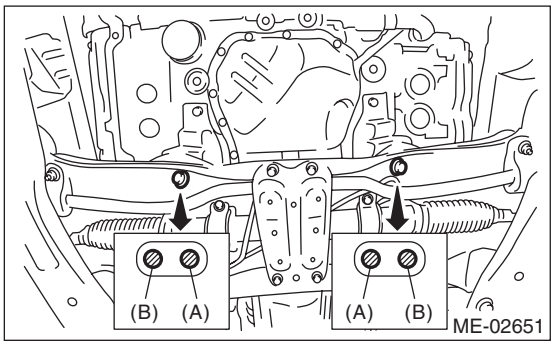

15) Install the front and center exhaust pipe.
<Ref. to EX(H4SO)-5, INSTALLATION, Front Exhaust Pipe.>

16) Lower the vehicle.

17) Connect the following hoses.
(1) Fuel delivery hose and evaporation hose
(2) Heater inlet and outlet hoses
(3) Brake booster vacuum hose

18) Connect the following connectors.
(1) Front oxygen (A/F) sensor connector
(2) Rear oxygen sensor connector
(3) Engine harness connectors
(4) Generator connector and terminal
(5) A/C compressor connector

19) Install the air intake chamber stay.

Tightening torque:
16 N·m (1.6 kgf-m, 11.6 ft-lb)

20) Install the engine ground cable.

Tightening torque:
14 N·m (1.4 kgf-m, 10.1 ft-lb)

21) Install the A/C pressure hoses.
<Ref. to AC-35, INSTALLATION, Hose and Tube.>

22) Install the radiator to vehicle. <Ref. to CO(H4SO)-24, INSTALLATION, Radiator.>

23) Install the air intake duct, air cleaner case and air intake chamber. <Ref. to IN(H4SO)-7, INSTALLATION, Air Intake Duct.> <Ref. to IN(H4SO)-5, INSTALLATION, Air Cleaner Case.> <Ref. to IN(H4SO)-6, INSTALLATION, Air Intake Chamber.>

24) Install the under cover.

25) Install the battery in the vehicle, and connect cables.

26) Fill engine coolant.
<Ref. to CO(H4SO)-16, FILLING OF ENGINE COOLANT, REPLACEMENT, Engine Coolant.>

27) Check the ATF level and replenish it if necessary.
<Ref. to 4AT-28, INSPECTION, Automatic Transmission Fluid.>

28) Charge the A/C system with refrigerant. <Ref. to AC-20, PROCEDURE, Refrigerant Charging Procedure.>

29) Remove the front hood stay, and close the front hood.

30) Lower the vehicle from the lift.

C: INSPECTION

1) Check that pipes, hoses, connectors and clamps are installed firmly.

2) Check the engine coolant and ATF are at specified levels.

3) Start the engine and check for exhaust gas, engine coolant, leaks of fuel, etc. Also check for noise and vibrations.